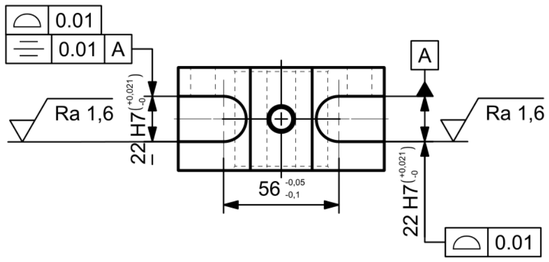

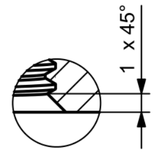

DETAIL B
SCALE 5:1

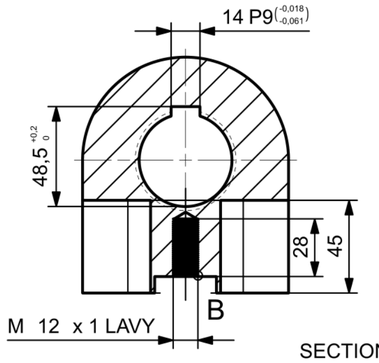

SECTION A-A

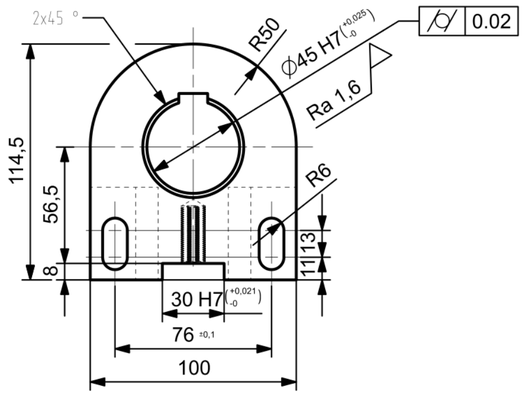

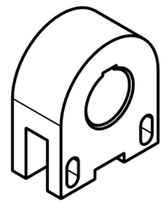

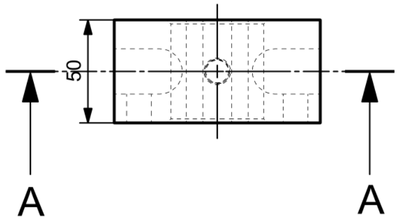

Vypis z technickej normy ISO 2768-mK
Extract from the technical standard ISO 2768-mK

Dlzkova mera / Length ranges		Uhlova mera / Angular ranges	
>120 - 400	± 0,5		
> 30 - 120	± 0,3	>50 - 120	± 0,33°
> 6 - 30	± 0,2	>10 - 50	± 0,5°
> 0,5 - 6	± 0,1	<10	± 1°
< 0,5	± 0,05		
Zaoblenia a skosenia / Round cutters and chamfer heights			
<0,5	± 0,05	>3 - 6	± 0,5
>0,5 - 3	± 0,2	>6	± 1
Hrana - jehlenie / workpiece edge - deburring		+0,2 L=0,1	-0,1 L=0,2

Ostatne tolerancie
Other tolerances

Vseobecne tolerancie kontury, profilu / General tolerances of radii and contours ± 0,15
Vseobecne montazne tolerancie / General montage tolerances ± 0,2

- BEZ TEPELNEHO SPRACOVANIA
- BEZ POVRCHOVEHO NATERU ALEBO INEHO POVLAKOVANIA
- ODJEHLIT

Ra 3,2

Vyhotovene spolocnostou MHdesigns, s r o

Zakaznik c. / Customer No. -

This drawing is the property of company MHdesigns, s r o. It must not be reproduced or copied and must be returned at any time upon demand. This drawing is also confidential and must be disclosed to no other than employee requiring it for the job. It is a condition under which the job is placed that no goods will be made, modified or repaired from this drawing except in accordance with an official order from company MHdesigns, s r o.

Revizia Rev.	Datum Date	Zmenil Changed	Popis vykonanej revoznej zmeny / Revision Record

MH DESIGN
STROJNÁ KONŠTRUKČNÁ KANCELÁRIA
www.mhdesign.sk

MH designs, s.r.o.
strojna konstrukcna kancelaria
M. Benku 2423/2
Topolcany 95503
TEL.:+421(0)949 754 265
mail: michal.holdy@mhdesigns.sk
web: http://www.mhdesigns.sk

	Datum Date	Meno Name
2026		
Navrhol Design	21.07.	holdy
Skreslil Drawn	21.07.	holdy
Uvolnil Appr		

Vseobecna tolerancia Permissible tolerance: ISO 2768-mK

Oddelenie Department: MH designs, s r o

Stav povrchu Surface: –

Pre nevyspecifikovane rozmery, pozri model. For unspecified dimensions, refer to model.

Mierka Scale: 1 : 2
Vaha Weight: 2,7631 kg
Material Material: 16MnCr5
Materialove spracovanie Material treatment: normalizovaná
Nazov Title: DRZIAK
Databazove cislo Part-No: 25120110
Jednotky Unit: mm
Cislo dokumentu File-No: –
Strana Sheet: 11 z celku of: 25
Cislo vykovu Forging-No: –
Format Size: A2

Obj: MH130826 | 25120110_DRZIAK | 1 ks | T: 5.9.2026 | do zostavy ZOSTAVA_25120100_MHT_ZAVITOREZ