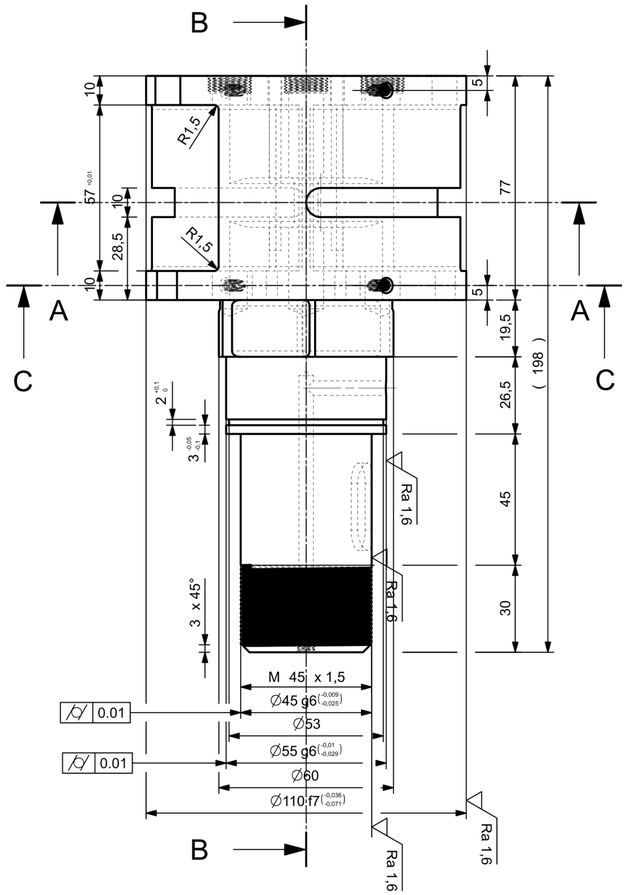

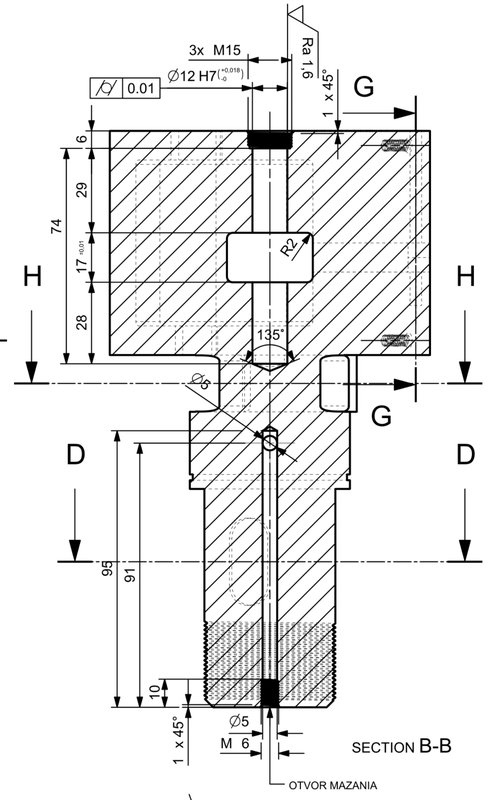

SECTION B-B

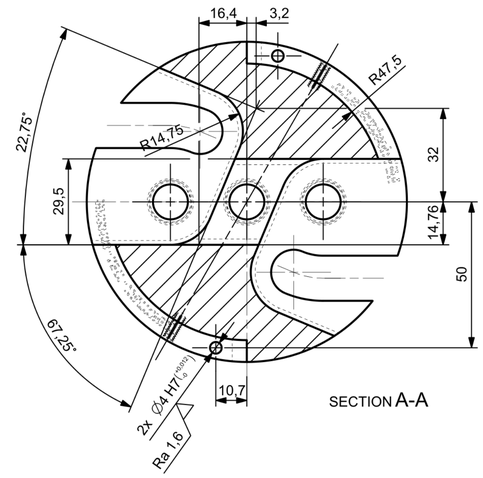

SECTION A-A

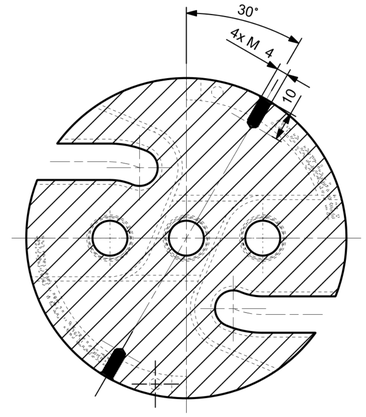

SECTION C-C

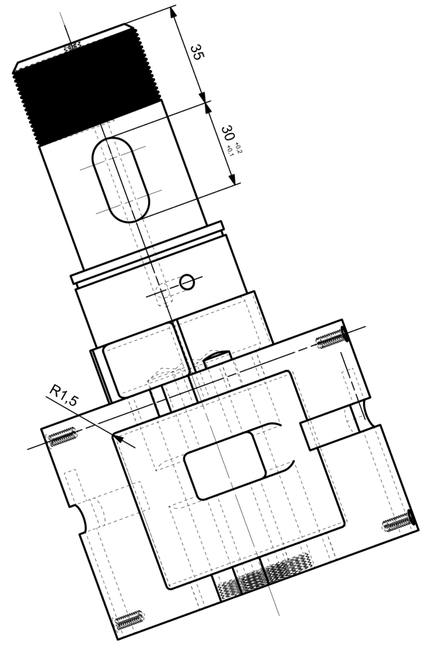

VIEW F

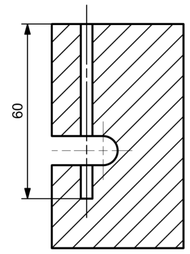

SECTION G-G

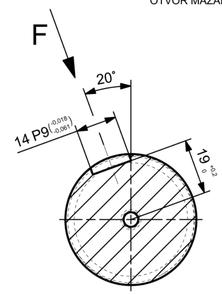

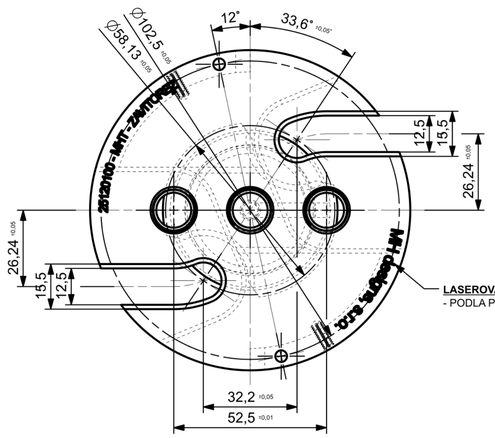

LASEROVAT TEXT CELA
- PODLA PREDLOHY 3D MODELU

SECTION D-D

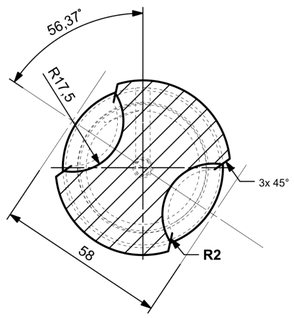

SECTION H-H

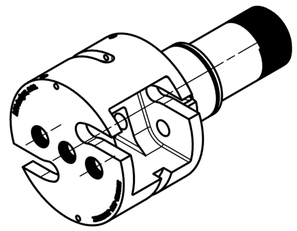

- BEZ TEPELNEHO SPRACOVANIA
- BEZ POVRCHOVEHO NÁTERU ALEBO INEHO POVLAKOVANIA
- ODJEHLIT

Ra 3,2

Vyhotovene spolocnostou MHdesigns, s r o

Vypis z technickej normy ISO 2768-mK
Extract from the technical standard ISO 2768-mK

Dlzkova mera / Length ranges		Uhlova mera / Angular ranges	
>120 - 400	± 0,5		
> 30 - 120	± 0,3	>50 - 120	± 0,33°
> 6 - 30	± 0,2	>10 - 50	± 0,5°
> 0,5 - 6	± 0,1	<10	± 1°
< 0,5	± 0,05		
Zaoblenia a skosenia / Round cutters and chamfer heights			
<0,5	± 0,05	>3 - 6	± 0,5
>0,5 - 3	± 0,2	>6	± 1
Hrana - jehlenie / workpiece edge - deburring			

Ostatne tolerancie
Other tolerances

Vseobecne tolerancie kontury, profilu ± 0,15
General tolerances of radii and contours

Vseobecne montazne tolerancie ± 0,2
General montage tolerances

This drawing is the property of company MHdesigns, s r o
It must not be reproduced or copied and must be returned at any time upon demand. This drawing is also confidential and must be disclosed to no other than employee requiring it for the job. It is a condition under which the job is placed that no goods will be made, modified or repaired from this drawing except in accordance with an official order from company MHdesigns, s r o

Revizia Rev	Datum Date	Zmena Changed	Popis vykonanej revaznej zmeny / Revision Record

Zakazník c. / Customer No. -

MH designs, s.r.o.
strojna konstrukcna kancelaria
M. Benku 2423/2
Topolcany 95503
TEL.:+421(0)949 754 265
mail: michal.holdy@mhdesigns.sk
web: http://www.mhdesigns.sk

STROJNÁ KONŠTRUKČNÁ KANCELÁRIA
www.mhdesign.sk

Merka / Scale	1 : 1	Vaha / Weight	4,7845 kg
Material / Material	16MnCr5	Materialove spracovanie / Material treatment	normalizovaná

Nazov / Title: NOSNA OS

	Datum Date	Meno Name	Tolerancie / Permissible Tolerance	Oddelenie / Department
2026				
Navrhol / Design	19.07.	holdy	ISO 2768-mK	MH designs, s r o
Skreslil / Drawn	19.07.	holdy		
Overil / Appr				

Stav povrchu / Surface: -

Pre nevyspecifikovane rozmery, pozri model / For unspecified dimensions, refer to model

Ciselo dokumentu / File-No.	25120105
Ciselo vykresu / Forging-No.	-
Strana / Sheet	6 z celku / of 25
Format / Size	A1
Jednotky / Unit	mm

Obj: MH130826 | 25120105_NOSNA_OS | 1 ks | T: 5.9.2026 | do zostavy ZOSTAVA_25120100_MHT_ZAVITOREZ