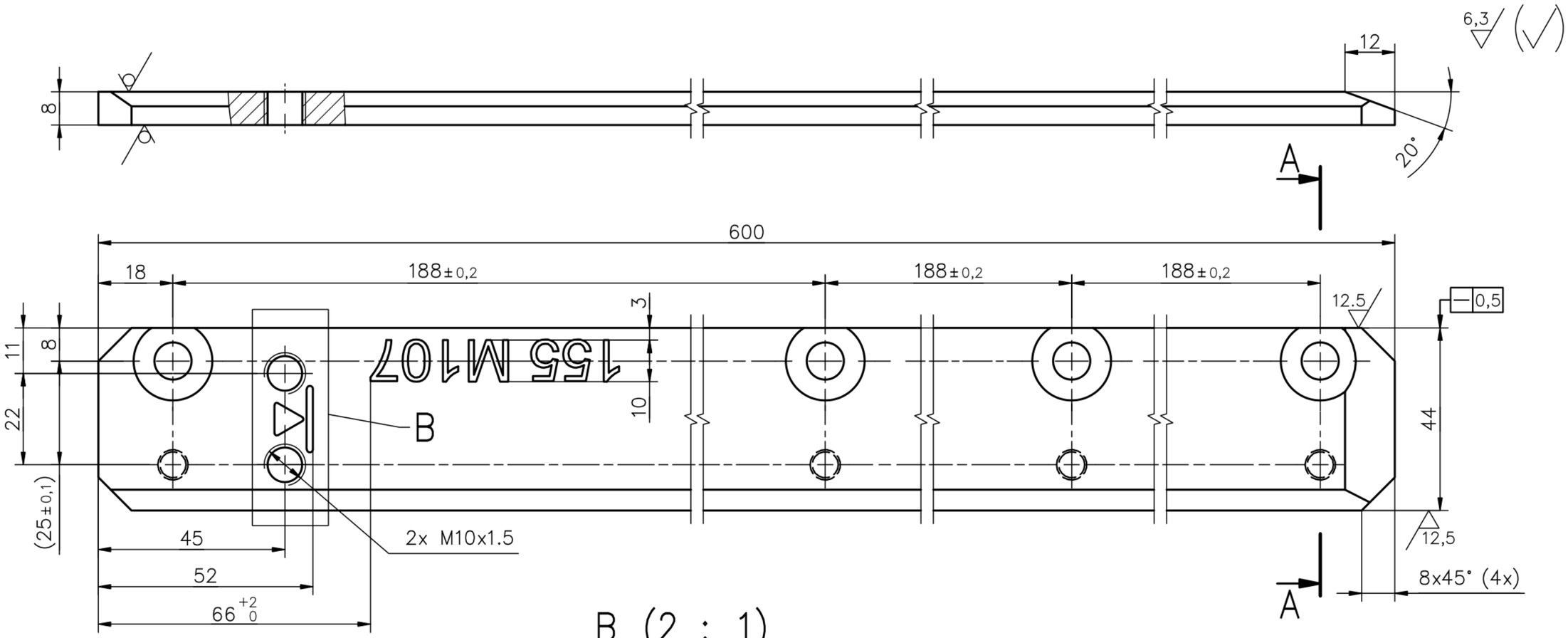

A–A (1 : 1)

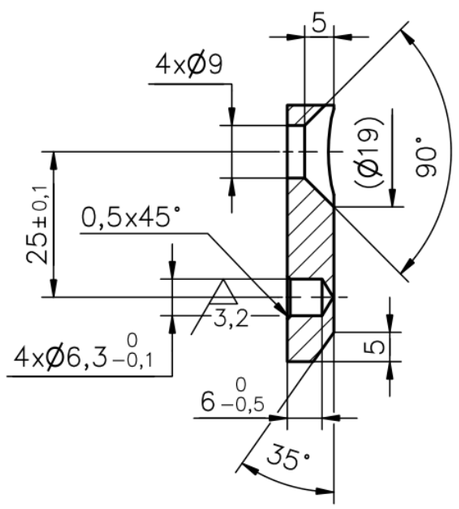

B (2 : 1)

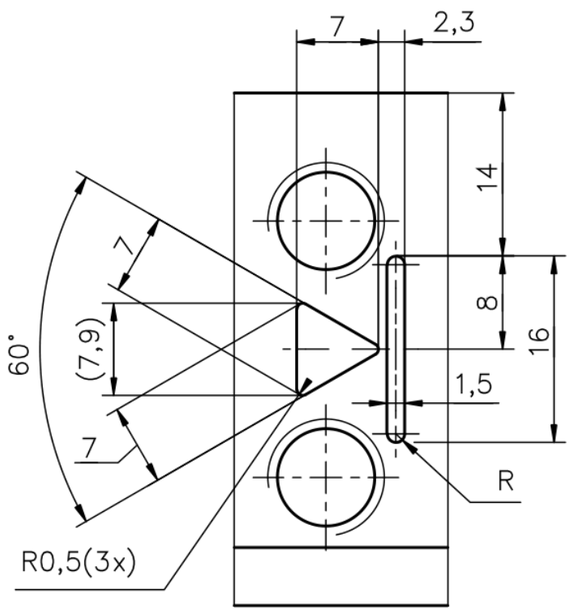

4. NÁPIS A ZNAČKU V DETAILE "B" GRAVÍROVAŤ ALEBO VYPÁLIŤ LASEROM DO HLBKY 0,3mm A VYPLNIŤ ČERVENOU FARBOU. PÍSMO TECHNICKÉ, TYP B ALEBO CB, KOLMÉ PODLA STN EN ISO 3098.
3. NÁBEHY A VÝBEHY ZÁVITOV ZRAZIŤ 1x45° .
2. OSTRÉ HRANY ODIHLIŤ.
1. HMOTNOSŤ: 1.587 kg.

GENERAL TOLERANCES COMPLY WITH **STN ISO 2768 - mK**		THIS DRAWING IS THE PROPERTY OF DELTA DEFENCE a.s., IT IS NOT TO BE COPIED OR DUPLICATED IN ANY MANNER, AND SHALL NOT BE SUBMITED TO OUTSIDE PARTIES FOR EXAMINATION WITHOUT OUR KNOWLEDGE AND CONSENT. IT SHALL BE USED AS A MEANS OF REFERENCE TO WORK FURNISHED BY THIS COMPANY ONLY.		
DRAWN BY Z.Goga	DATE 10. 4. 2026	**DELTA DEFENCE a.s. BRATISLAVA**		
MATERIAL 17 240		FIRST ANGLE PROJECTION	SCALE: 1:1	SHEET: 1 OF 1
SEMIPRODUCT P8		DESCRIPTION **LIŠTA B 155 M107**		
REFERENCE KS4A-99.0000		SIZE **A3**	PART NO. **KS4A-99.9012**	REVISION b

Obj: DD090926 | KS4A-99.9012-b | 2 ks | T: 19.9.2026