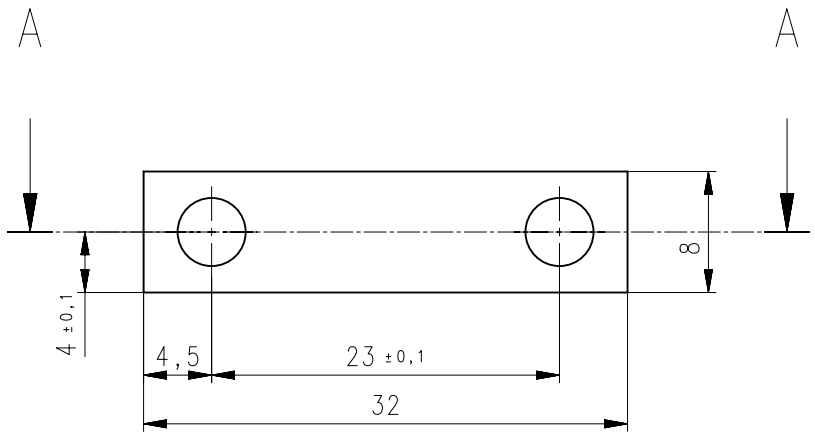

A – A

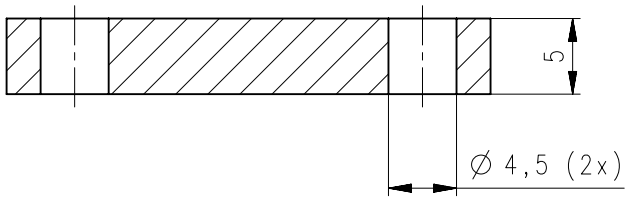

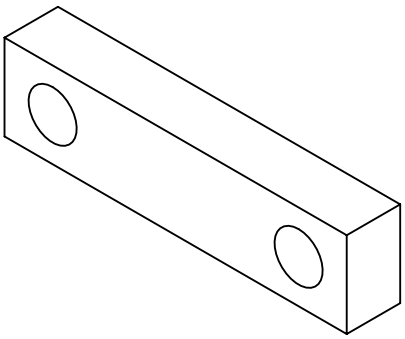

REMOVE ALL SHARP EDGES AND BURRS

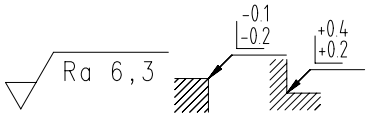

This drawing is the property of Pankl Systems Austria GmbH. It must not be reproduced or copied and must be returned at any time upon demand. This drawing is also confidential and must be disclosed to no other than employee requiring it for the job. It is a condition under which the job is placed that no goods will be made, modified or repaired from this drawing except in accordance with an official order from Pankl Systems Austria GmbH.

Rev. Iss.	Datum date	geändert von modified by	Beschreibung der Änderung Issue record
a	07.09/2026	Zahumensky L.	First Edition

PANKL SYSTEMS AUSTRIA GMBH
DRIVETRAIN SYSTEMS

A-8605 Kapfenberg, Industriestrasse West 4
TEL.: +43(0)3862/33999 0
TELEFAX.: +43(0)3862/33999 719
web.: http://www.pankl.com

made by PANKL with Siemens NX

	Datum date	Name name
bearbeitet: designed:	07.09/2026	Zahumensky L.
gezeichnet: drawn:	07.09/2026	Zahumensky L.
geprüft: checked:		
freigegeben: approved:		

Benennung: title: Prizma_doraz

Sach-Nr.: Part-No.: 2609-3-01-001-08

Auftrags-Nr.: File-No.:

LH-/RH-Options:

Anwendung: application:

Kategorisierung: category:

Projektstaus: project status:

Gewicht: weight: g

Verwendungszweck: intended purpose: FERTIGUNG PRODUCTION

Werkstoff: material: S235JR

Gleitschleifprozess: super finishing process:

WBH: H/T:

Oberflächenbehandlung: surface treatment:

Kugelstrahlprozess: shot peening process:

Rissprüfung: crack testing:

Zulässige Abweichung: permissible tolerance: ISO8015 / ISO 2768-mK

Einheit: unit:	Massstab: scale:	Format: size:	Blatt: sheet:
mm	2 : 1	A4	1/1