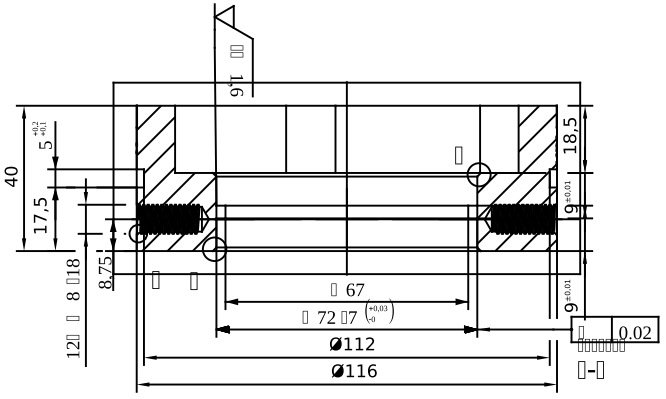

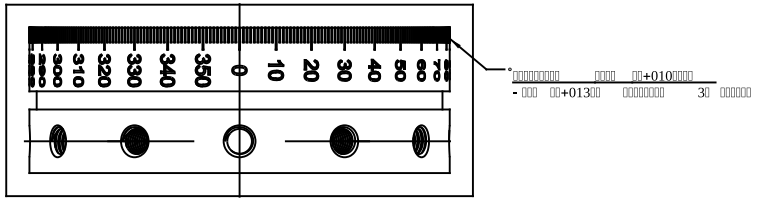

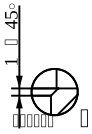

2:1

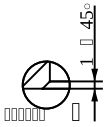

2:1

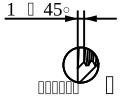

2:1

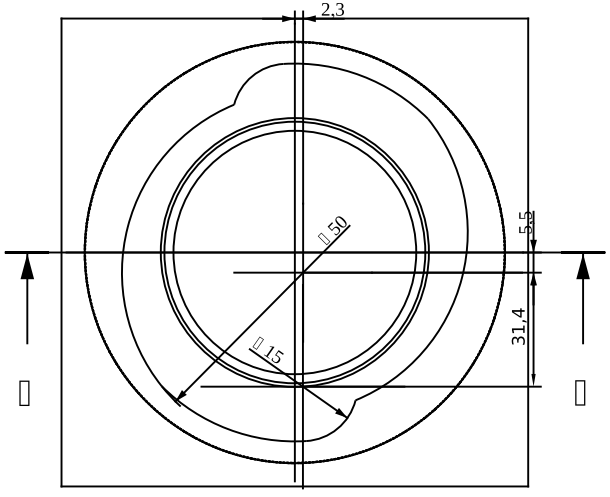

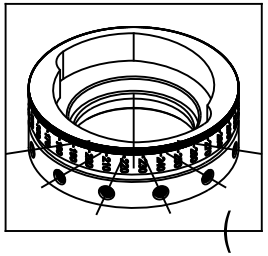

Ra 3,2

- BEZ TEPELNEHO SPRACOVANIA
- BEZ POVRCHOVEHO NATERU ALEBO INEHO POVLAKOVANIA
- ODJEHLIT

Vypis z technickej normy ISO 2768-mK
Extract from the technical standard ISO 2768-mK

Dlzkova miera / Length ranges		Uhlova miera / Angular ranges	
>120 - 400	±0,5		
> 30 - 120	±0,3	>50 - 120	±0,33°
> 6 - 30	±0,2	>10 - 50	±0,5°
> 0,5 - 6	±0,1	<10	±1°
< 0,5	±0,05		
Zaoblenia a skosenia / Round cutters and chamfer heights			
<0,5	±0,05	>3 - 6	±0,5
>0,5 - 3	±0,2	>6	±1
Hrana - jehlenie / workpiece edge - deburring		+0,2 +0,1 / -0,1 -0,2	

Ostatne tolerancie:
Other tolerances:
Vseobecne tolerancie kontury, profilu : ±0,15
General tolerances of radii and contours
Vseobecne montazne tolerancie : ±0,2
General montage tolerances

Zakaznik c.: / Customer No.: -

This drawing is the property of company MHdesigns, s.r.o. It must not be reproduced or copied and must be returned at any time upon demand. This drawing is also confidential and must be disclosed to no other than employee requiring it for the job. It is a condition under which the job is placed that no goods will be made, modified or repaired from this drawing except in accordance with an official order from company MHdesigns, s.r.o.

Revízia Rev.	Dátum Date	Zmenil Changed	Popis vykonanej revíznej zmeny / Revision Record
			Vyhotovené spoločnosťou MHdesigns, s.r.o.

MH designs, s.r.o.
strojna konstrukcna kancelaria
M. Benku 2423/2
Topolcany 95503
TEL.:+421(0)949 754 265
mail: michal.holdy@mhdesigns.sk
web: http://www.mhdesigns.sk

Mierka / Scale: 1:1
Vaha / Weight: 1,4549 kg
Material / Material: 16MnCr5
Materialove spracovanie / Material treatment: normalizovaná
Nazov / Title: VACKA

	Datum / Date	Meno / Name
2026		
Navrhol / Design:	20.07.	holdy
Skreslil / Drawn:	20.07.	holdy
Overil / Appr.:		

Vseobecna tolerancia / Permissible tolerance: ISO 2768-mK
Oddelenie / Department: MH designs, s.r.o.
Stav povrchu / Surface: -
Pre nevyspecifikovane rozmery, pozri model. / For unspecified dimensions, refer to model.

Databazove cislo / Part-No.: 25120107
Jednotky / Unit: mm
Cislo dokumentu / File-No.: -
Strana / Sheet: 8
z celku / of: 25
Cislo vykovu / Forging-No.: -
Format / Size: A2