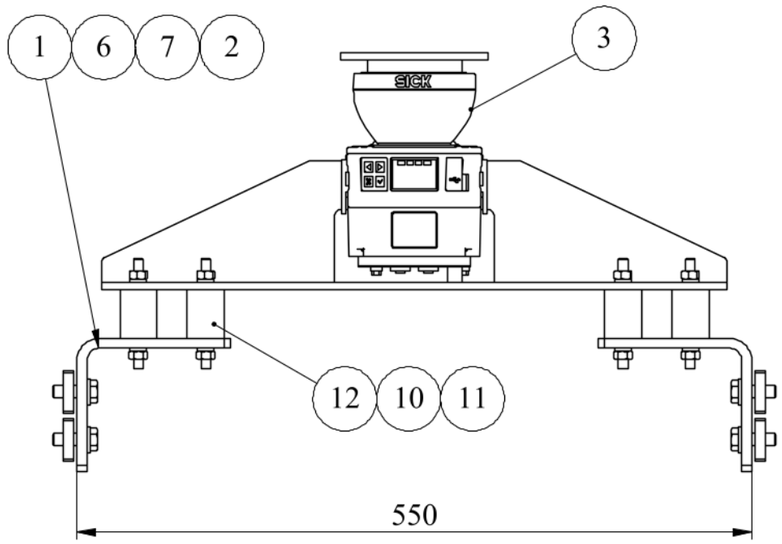

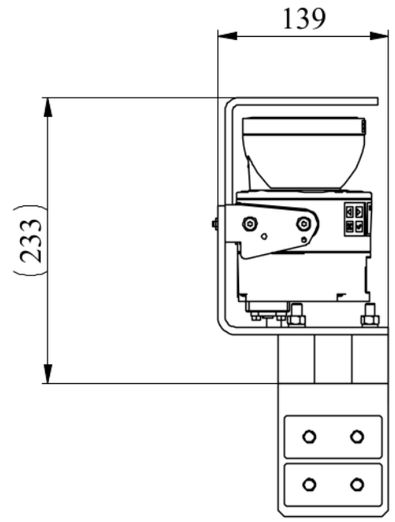

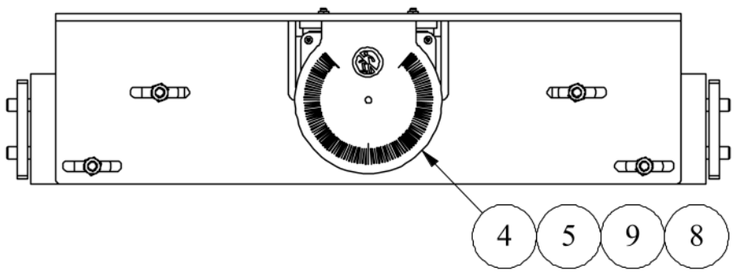

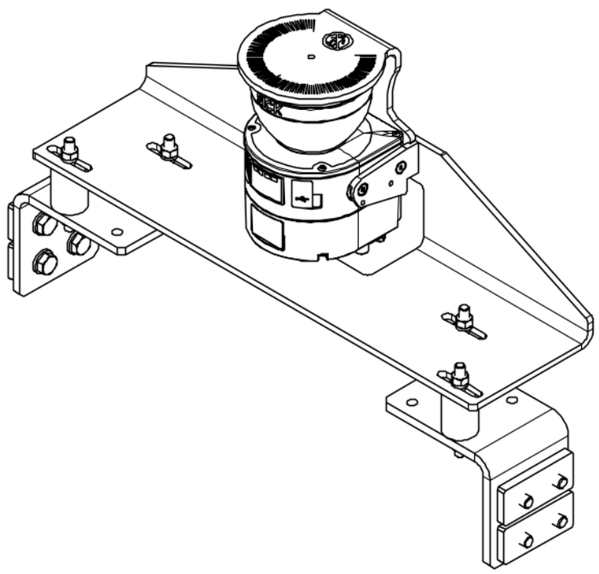

Item	Qty	Name	Designation
1	2	DES-000959410	PLAQUE DE LIAISON
2	4	DES-000618962	PLAQUE ECROU
3	1	CMD-000072553	Escáner láser de seguridad
4	1	CMD-000072552	Escuadra de fijación con protección para cubierta óptica
5	2	CMD-000045324	Hexagon socket countersunk head screw fully threaded-ISO 10642-M5x16-8.8-Zn
6	8	CMD-000008059	Hexagon head screw fully threaded-ISO 4017-M10x30-8.8-Zn
7	8	CMD-000007980	wedge-locking washers large diam,10
8	2	CMD-000007603	Washer flat narrow - z 5 - NFE25513 - steel 100hv - zn
9	2	CMD-000007598	Hexagon regular nut-ISO 4032-M5-8-Zn
10	8	CMD-000007857	wedge-locking washers middle diam,8
11	8	CMD-000007841	Hexagon regular nut-ISO 4032-M8-8-Zn
12	4	CMD-000V4-67335-DFP-01000	Support elastique de compression cylindrique fixation a tige fil
13	1	DES-000959581	SCANNER HOLDER

EXCEPT OTHER INDICATION
General tolerances to be respected :
ISO 2768 : m & k
Welding : v
Sheet Metal : v
Mould : ISO 8062
Surface texture : ISO 1302
Welding Symbols : ISO 2553

CAUTION :
All dimensions are in millimeters and projected view in ISO std

WA+10

Mod	Date	By	Modifications
-	13-08-26	E049127	Creation du document

Legacy BOM

Legacy ID

Mass (Kg) : 20

SCANNER MOUNTING

DES-000957812

Drawing Number

Rev : -

DTM Class : 2-01-06 | D3

Size : A3 | Scale : 1:5 | Units : mm | SOLIDWORKS

Sheet : 1/1